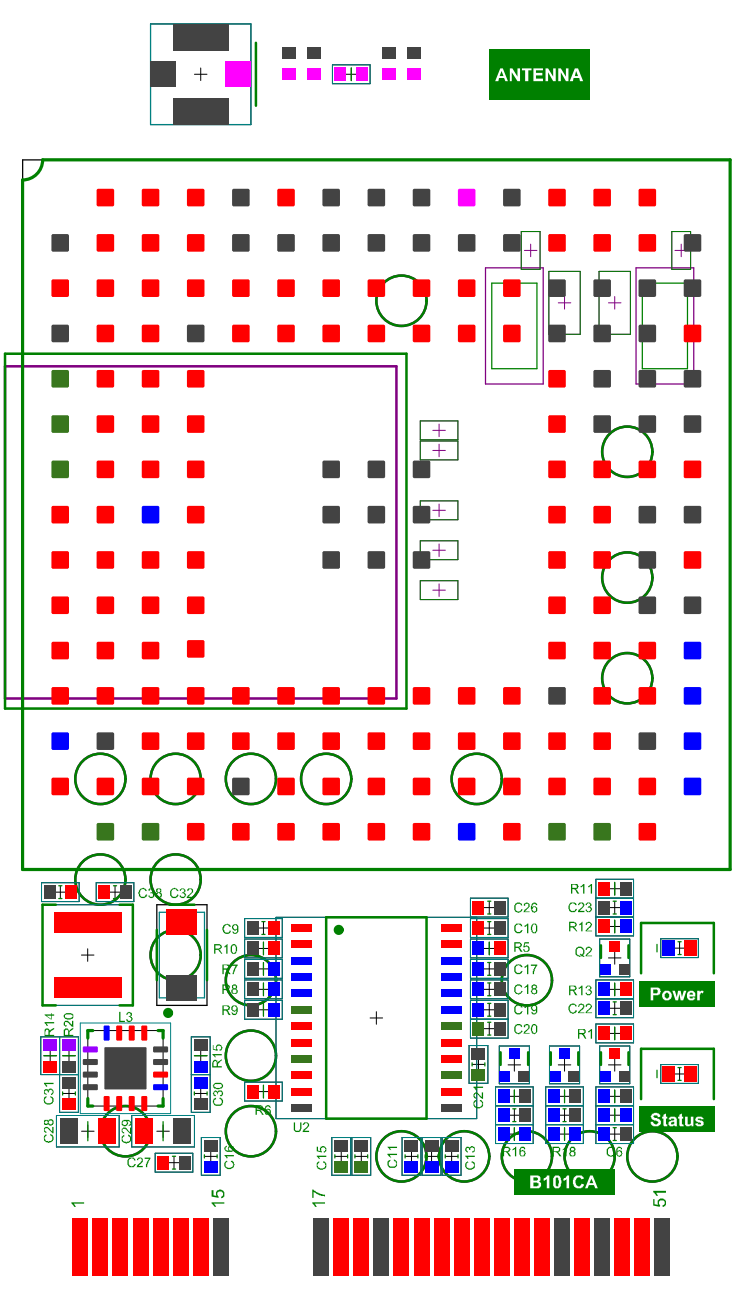
ANTENNA
C38
C32
C9
R10
R7
R8
R9
L3
R14
R20
C31
C28
C29
C27
R15
C30
R6
C16
U2
C15
C11
C13
C26
C10
R5
C17
C18
C19
C20
C21
R16
R18
C6
R11
C23
R12
Q2
R13
C22
R1
Power
Status
B101CA
1
15
17
51

B10CA
Micro SIM Tray
DEBUG_TX
C32
C32
F1
F2
C24
C34
C1
D1
DEBUG_RX
D2
D4
D3
M09
1V8_PMON
VUSB
TX_AUX
GPIO_09
USB_BOOT
RX_AUX
USB D-
USB D+
3V8
TX
RX
P_EN
GND
VCC
NOM
TYMEWAR
RN
FLOUD
NMOS
SCM_EN

B10CA
Micro SIM Tray
DEBUG_TX
C32
C32
F1
F2
C24
C34
C1
D1
DEBUG_RX
D2
D4
D3
M09
1V8_PMON
VUSB
TX_AUX
GPIO_09
USB_BOOT
RX_AUX
USB D-
USB D+
3V8
TX
RX
P_EN
GND
VCC
NOM
TYMEWAR
RN
FLOUD
NMOS
SCM_EN

B1017CA
Micro SIM Tray
DEBUG_TX
C32
C33
FB1
FB2
C24
C34
C1
D1
D2
D4
D3
DEBUG_RX
M09
1V8_PMON
VUSB
TX_AUX
RX_AUX
USB_BOOT
GPIO_09
USB D-
USB D+
3V8
TX
RX
P_EN
GND
VCC
NOM9
YTM3M6
BGN
FB_OUT
NMOS
SCM_EN